MiniRoute

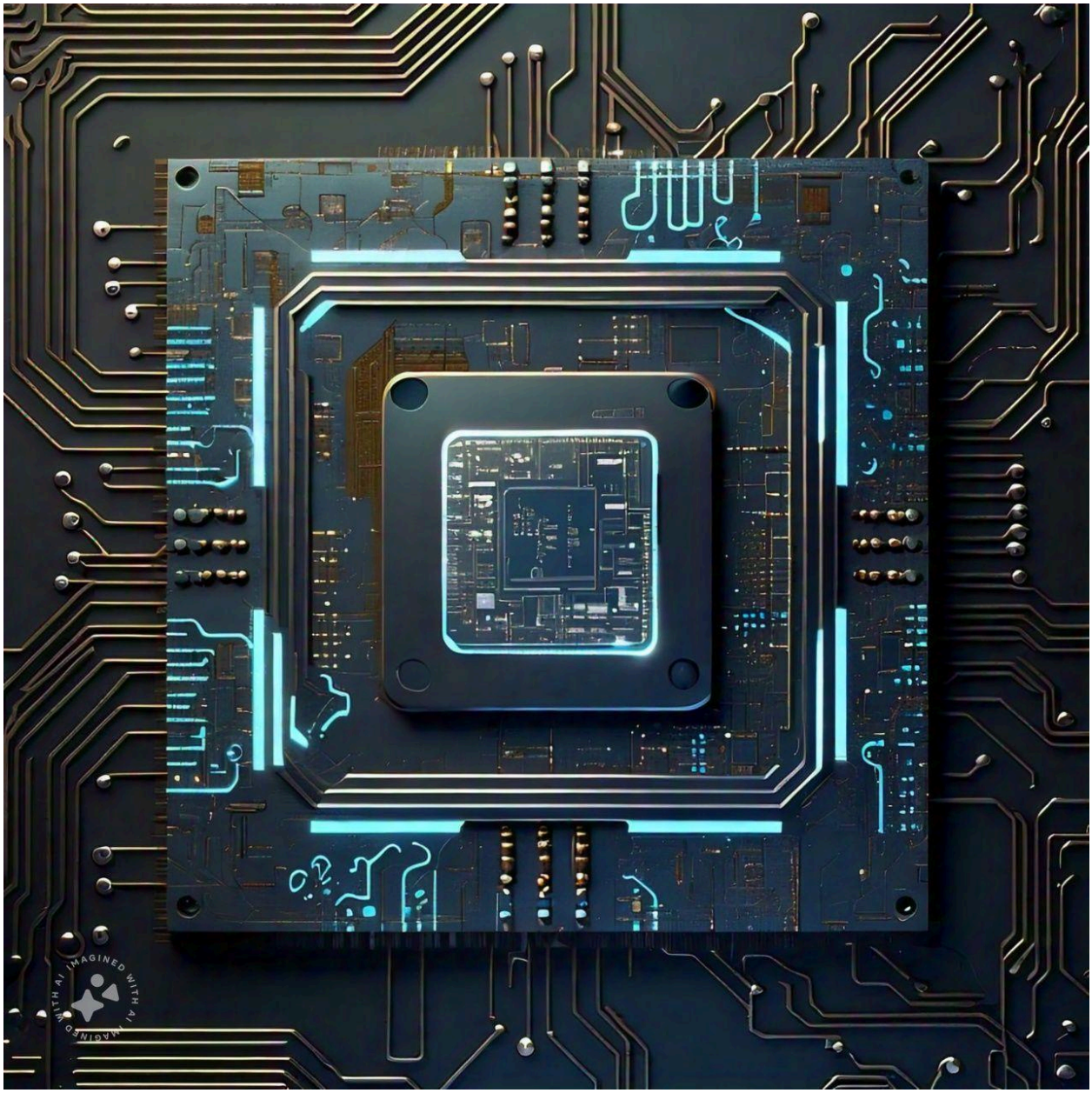

(Not the actual product)

MiniRoute - High Level Specification

A network switch is a hardware device that connects multiple devices on a computer network and uses packet switching to forward data to its destination.

This document introduces a mock version of a network switch/router, and is organized into following sections.

1- Introduction **3**
- 1.a - Packet Structure 3
  - 1.a.1- Source Address 4
  - 1.a.2- Destination Address 4
  - 1.a.3- Checksum 5
  - 1.a.4- Packet Type 5
  - 1.a.5- Data 5
- 1.b- Features 5
  - 1.b.1- Checksum 6
  - 1.b.2- Different Packet Types 6
- 1.c- Error Packets 7

2- Interface Signals **7**
- 2.a- Input 9
- 2.b- Output 10

3- Configuration **11**
- 3.a- Configuration Registers 11
- 3.b- Configuration Flow 11

4- Operation **14**

5- Components **16**
- 5.a State Machine 17

1- Introduction

MiniRoute is a simpler version of a router/network switch that is used to route packets between different devices based on the source and destination addresses.

1.a - Packet Structure

A formatted unit of data in communication protocols is called a “packet”. It typically consists of control information (like source and destination addresses, error-checking data) and user data (payload). Packets enable efficient and reliable data transmission across networks by breaking down larger messages into smaller, manageable pieces that can be independently routed and reassembled at the destination.
A packet is usually divided into 2 sections, Header and Payload. Header contains the control information like source and destination address, security features, type of packets and other necessary information. Payload contains the Data that is being transferred from one device to the other.

MiniRoute uses the following packet structure.

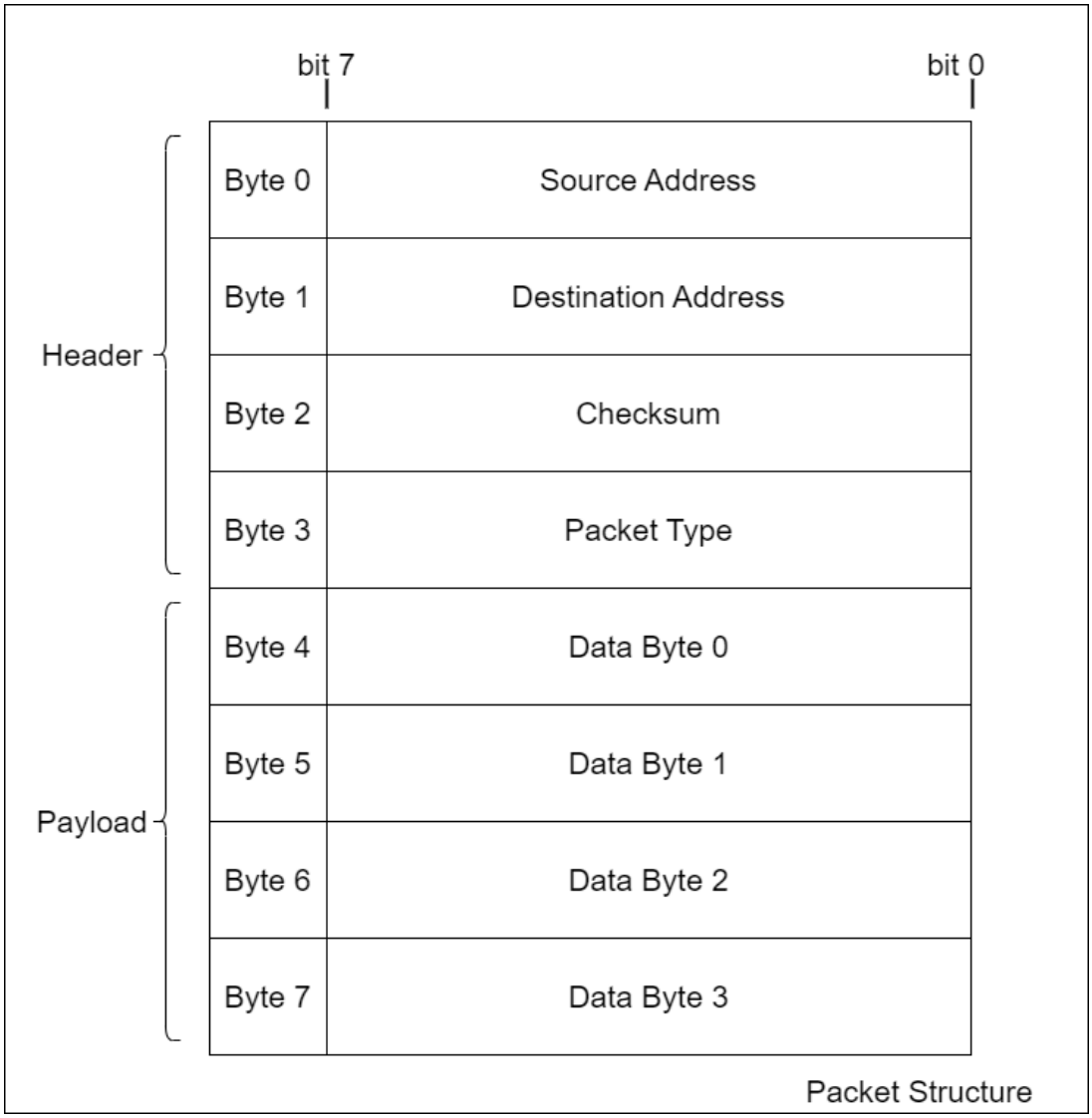

Fig 1.1 Packet Structure

1.a.1- Source Address

This 8-bit field indicates the address of the device from where the packet originated from. For example: Device 0xAF would have a source address = 1010_1111.

1.a.2- Destination Address

This 8-bit field indicates the address of the device to which the packet is routed to. For example: Device 0xAF sending data to Device 0x88 would have destination address = 1000_1000.

1.a.3- Checksum

Checksum is a value used to verify the integrity of data. It is calculated from the data and appended to it so that the receiver can recalculate the checksum and compare it with the transmitted checksum to detect any errors.

1.a.4- Packet Type

This 8-bit field is used to determine the packet type. Following table shows the possible values and their respective functions.

Value	Function
F1	Indicates a broadcast packet. A packet with this packet will be output to every output port irrespective of the destination address
F2	Indicates a multicast packet. A packet with this packet will be output to every output port except the input port irrespective of the destination address.
F3	Indicates a one-to-one packet. A packet with this packet will be output to only to the destination port.
F4	Indicates a configuration request packet. This means that the source device is requesting configuration.
F5	Indicates a configuration packet. This means that the packet contains the necessary configuration information.
F6	Configuration response packet. Indicates that MiniRoute has gone into configuration mode.
F7	Configuration Confirmation packet. Indicates that the MiniRoute has been configured successfully.
F8	Indicates that there is some sort of error. Data contains the respective error messages.

Table 1.1 Packet Types

1.a.5- Data

This 4-byte field indicates the data that is going to be transmitted in the packet.

1.b- Features

Following are some of the features of MiniRoute.

1.b.1- Checksum

Following algorithm is used to calculate the checksum.

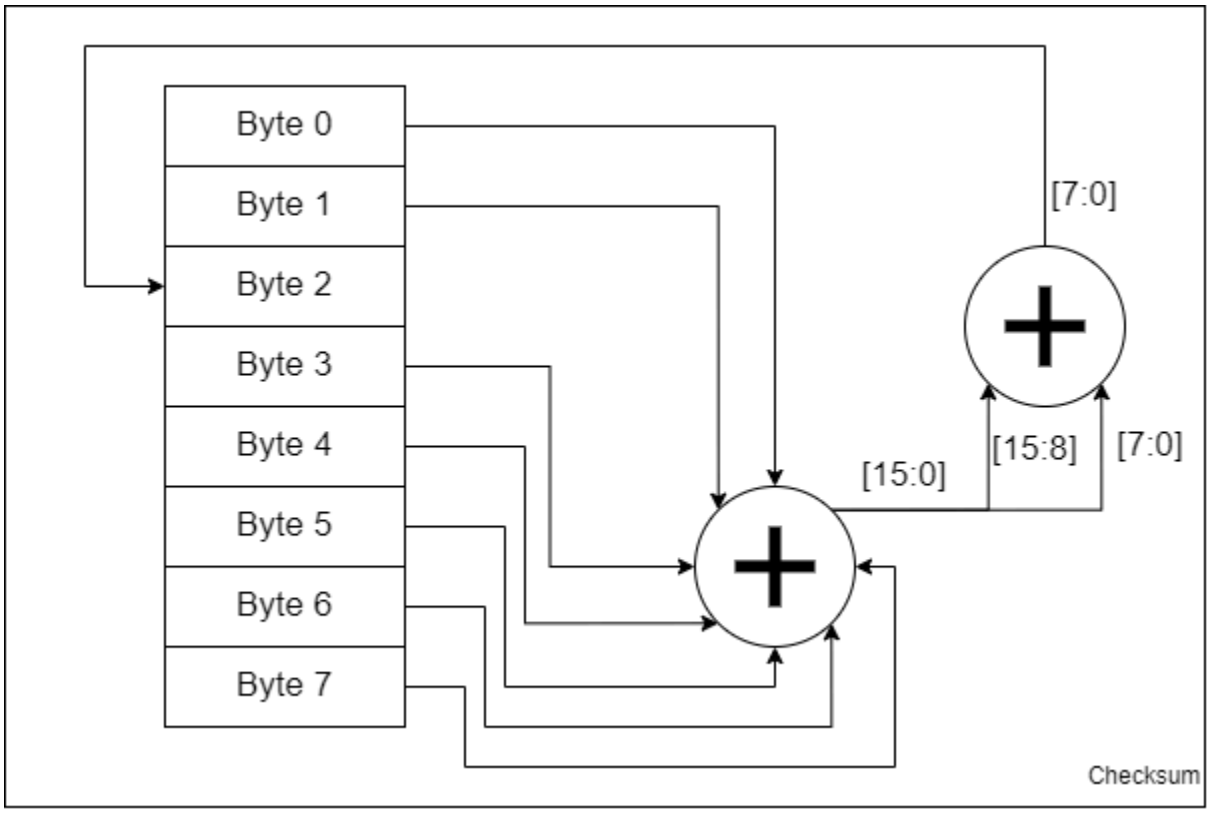

Fig 1.2 CheckSum Function

1.b.2- Different Packet Types

MiniRoute supports various types of packets from connected devices:

- **Broadcast Packet**: This packet is transmitted to every destination port, ignoring the destination address, provided it is not invalid. An invalid address will trigger the invalid address check, causing the packet to be ignored.
- **Multicast Packet**: This packet is transmitted to all destination ports except the one from which it was received. It follows the same assumption regarding the destination address as the Broadcast Packet.
- **One-to-One Packet**: This packet is routed based on the normal source and destination addresses.
- **Configuration Request Packet**: This packet signals MiniRoute that the source device is requesting a configuration change, putting the source port into configuration mode. The source address and data fields are ignored, but the checksum is still verified. If the checksum is incorrect, the packet is ignored. The destination address must be 0xFF.

- **Configuration Packet**: This packet contains necessary configuration information, with the source address ignored. The destination address must be 0xFF. Data fields may contain configuration details, and the checksum is still verified.

Additionally, there are special packets originating from MiniRoute, which have a source address of 0xFF:

- **Configuration Response Packet**: This packet is transmitted by MiniRoute to the source port, indicating that the port has entered configuration mode.
- **Configuration Confirmation Packet**: This packet confirms that the configuration was successful and is transmitted from MiniRoute to the connected device. It also indicates that the new configuration will be used henceforth.
- **Error Packet**: This packet is transmitted from MiniRoute to the connected device in case of an error.

1.c- Error Packets

Error packets are special packets that originate from MiniRoute and have the following specifications:

- **Source Address**: 0xFF
- **Destination Address**: Respective address of the port
- **Checksum**: Valid checksum
- **Packet Type**: 0xF8
- **Data Byte**: Contains the error message as follows:
    - **Data Byte 0[7:4]**: 0xF indicates an incorrect source port.
    - **Data Byte 0[3:0]**: 0xF indicates an incorrect destination port.
    - **Data Byte 1**: 0xFF indicates an incorrect checksum
    - **Data Byte 2**: 0xFF indicates that the configuration request cannot be processed currently.
    - **Data Byte3**: 0xFF indicates that the configuration message is not valid, and the connected device should resend the configuration message.

There can be multiple errors in a packet, and only the respective error bits will be set to 0xF or 0xFF. All other bits will be set to 0.

2- Interface Signals

MiniRoute features 4 sets of input and output ports, with each set corresponding to a single connected device. In other words, MiniRoute can support up to 4 devices simultaneously. The following tables outline the interface signals for an input and output port.

Signal Name	Direction	Purpose
port_in_x_data (8-bit)	input	This signal represents the data transferred from the connected device.
port_in_x_valid	input	This signal indicates that the data is now valid
port_in_x_success	output	Pulse. Indicates to the connected device that MiniRoute has successfully read the packet.
port_in_x_busy	output	Indicates that MiniRoute can not take any input.

Table 2.1 Input Port Signals

Signal Name	Direction	Purpose
port_out_x_data (8-bit)	output	This signal represents the data transferred to the connected device
port_out_x_valid	output	This signal indicates that the data is now valid

Table 2.2 Output Port Signals

Following are global signals that are common between every port.

Signal Name	Direction	Purpose
clock	input	Clock.
reset	input	Active Low Reset. It needs to be asserted for at least 10 clock cycles for MiniRoute to correctly reset.

Table 2.3 Global Signals

2.a- Input

The following waveform illustrates how the input can be driven to MiniRoute.

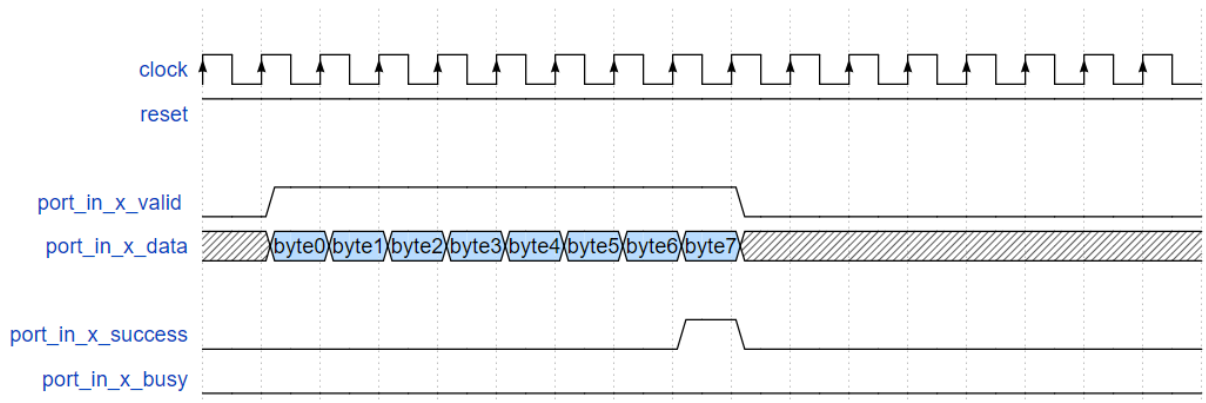

Fig 2.1 Single Packet Input

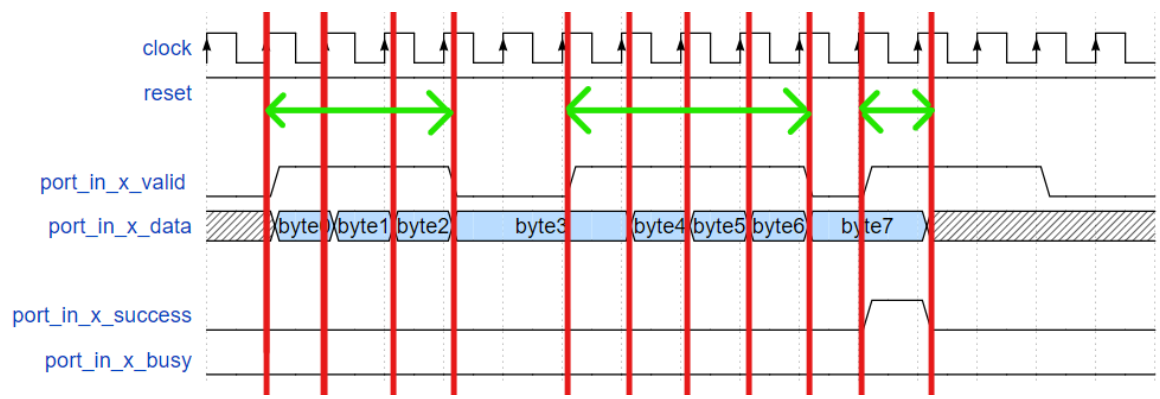

Fig 2.2 Single Packet Input the valid de-asserting

Following waveform indicates the effect of the signal busy being asserted. If port_in_busy is asserted, the port_in_x_data would be ignored regardless of the status of port_in_x_valid.

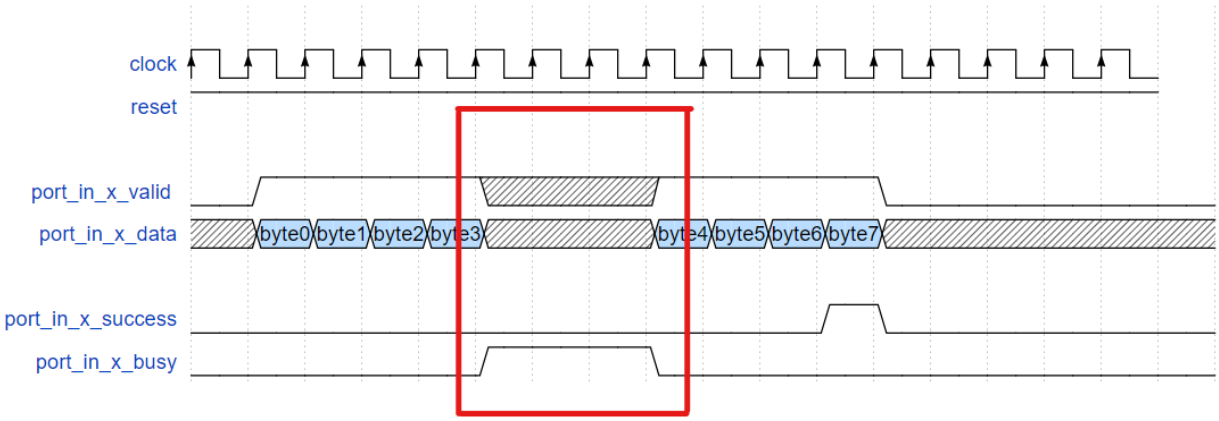

Fig 2.3 Effect of Port Busy on Input

2.b- Output

Following waveform shows one packet being output

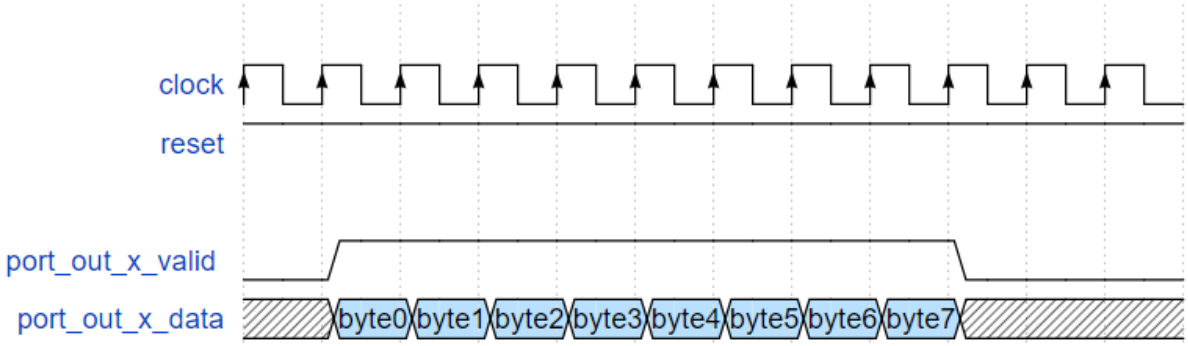

Fig 2.3 Single Packet Output

Following waveform shows two consecutive packets being output

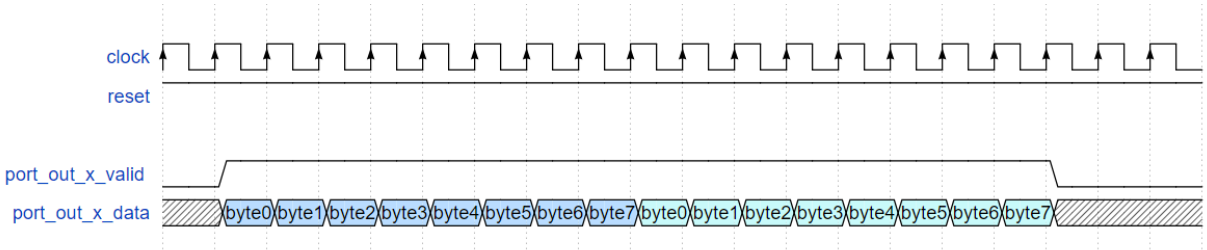

Fig 2.4 Multiple Packet Output

port_out_x_valid also works the same as port_in_x_valid.

3- Configuration

This section explains the configuration flow for MiniRoute. Each port of the MiniRoute has its own configuration registers.

3.a- Configuration Registers

The following are the configuration registers for each port of MiniRoute:

- **Port Address**: This register sets the port's address, which will be used by other connected devices as the destination address and by the device connected to the port as the source address. This value should be unique for every port. 0xFF is an invalid value as it represents MiniRoute itself. This is represented by Data Byte 0 in the configuration packet. In case of the wrong/duplicate port address, an error message will be returned with an error packet. (Data Byte 3 = 0xFF)
- **Device Connected**: A value of 0xFF in this register indicates that a device is connected to the port. This is represented by Data Byte 1 in the configuration packet.
- **Broadcast Enabled**: This register indicates whether the connected device permits broadcast or multicast packets to be sent to it. This is represented by Data Byte 2 in the configuration packet.

Once MiniRoute is in configuration mode, the connected device must send a single packet with all the configuration information.

3.b- Configuration Flow

Configuration on each port is required every time MiniRoute is reset. Additionally, connected devices can request configuration at any time during operation. Once MiniRoute has entered configuration state, it will remain in the configuration state unless it receives a valid configuration message. Every invalid configuration message will result in an error response.

The following timing diagrams illustrate various scenarios that can occur during configuration.

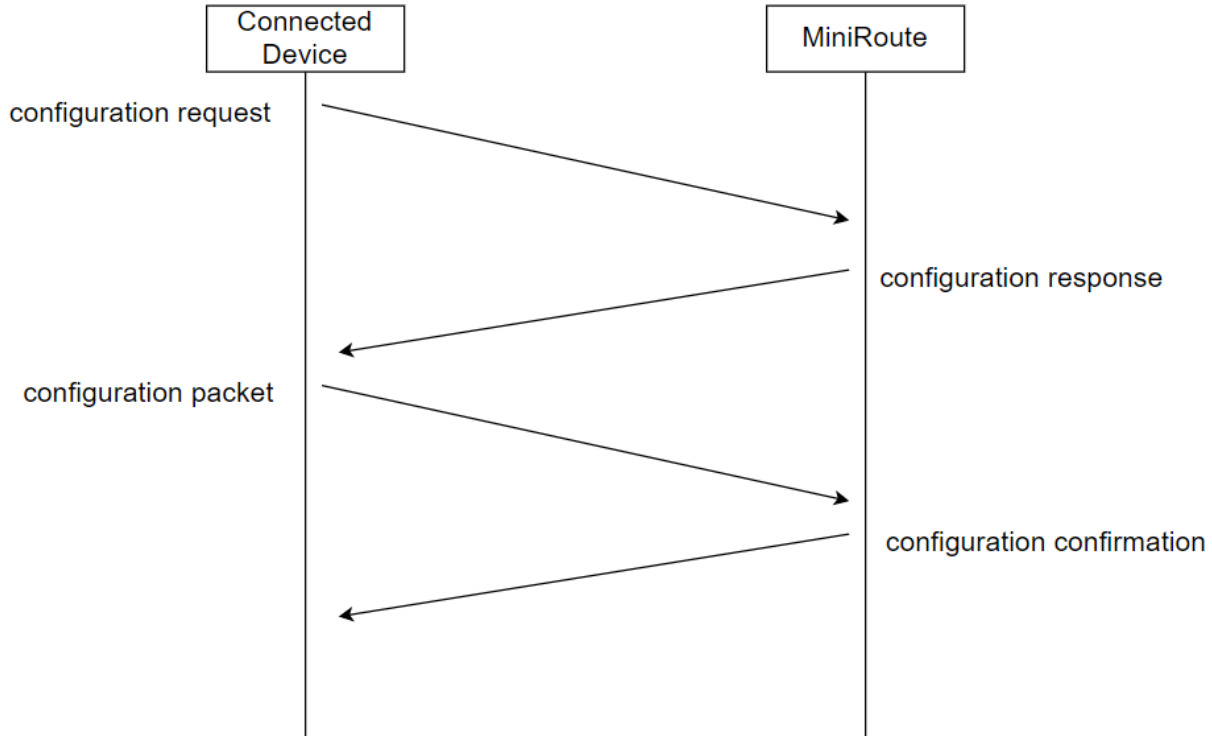

Fig 3.1 Successful Configuration Flow

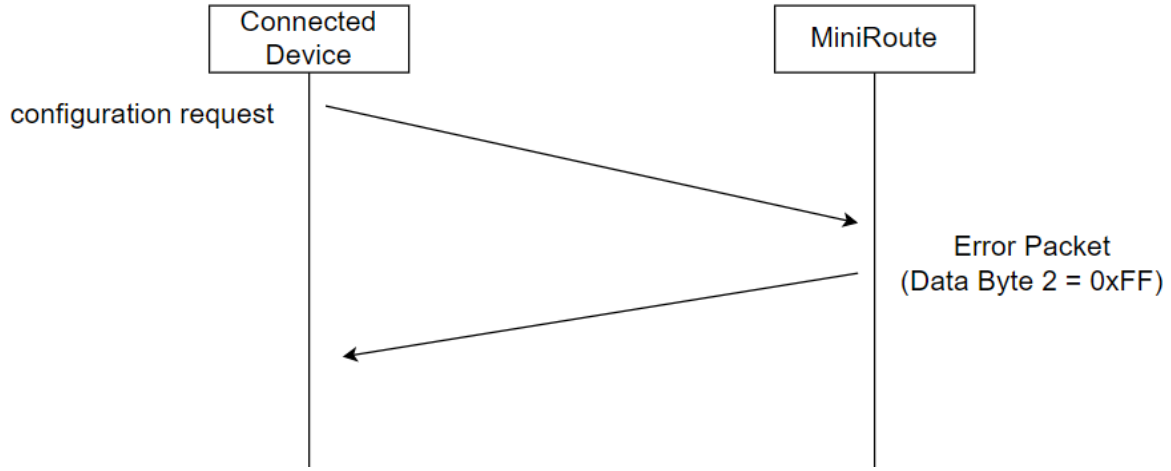

Fig 3.2 Unsuccessful Configuration Request

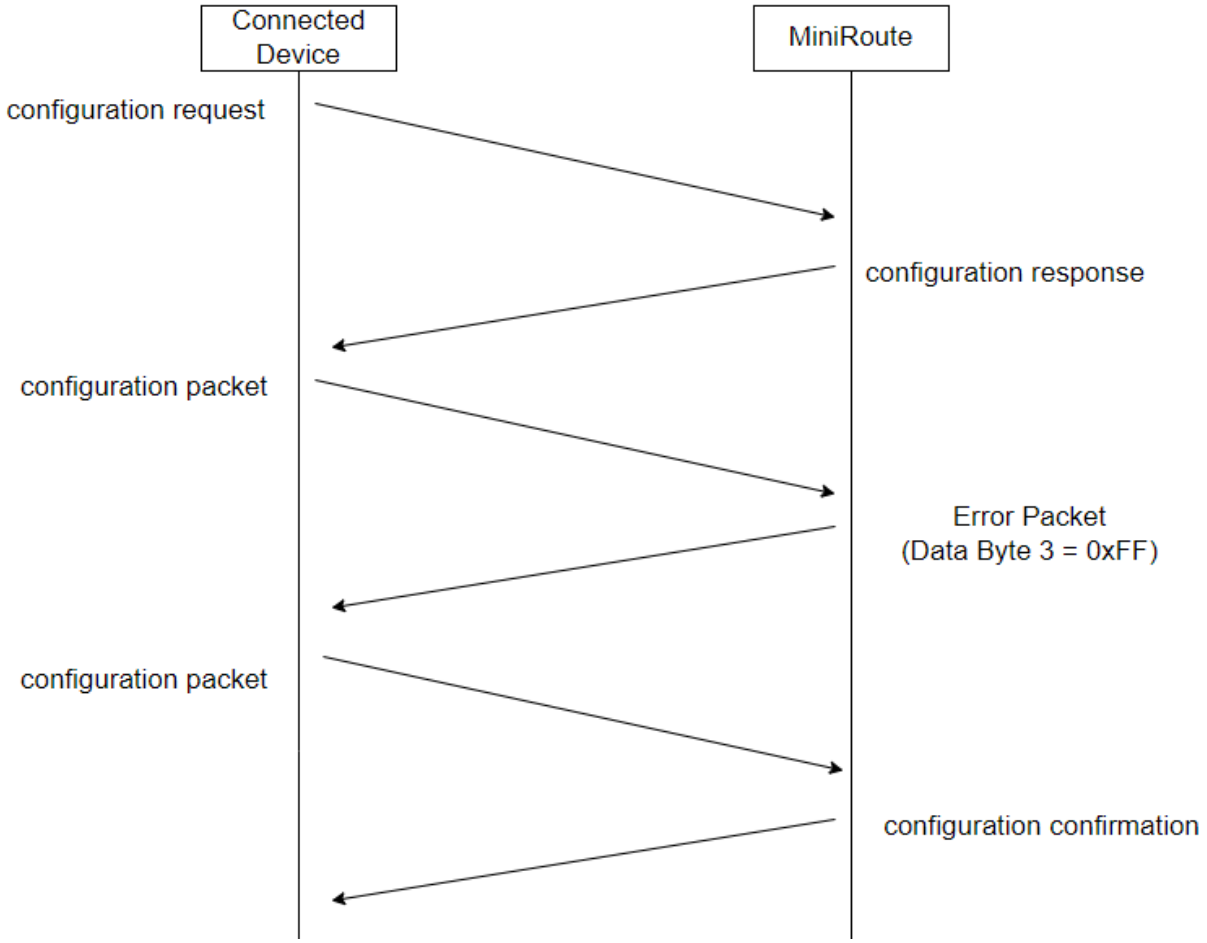

Fig 3.3 Successful request but Wrong Configuration Message

4- Operation

This chapter explains the different operation scenarios. Consider 4 devices connected and configured to the MiniRoute. Following diagram shows a normal routing operation for different type of packets

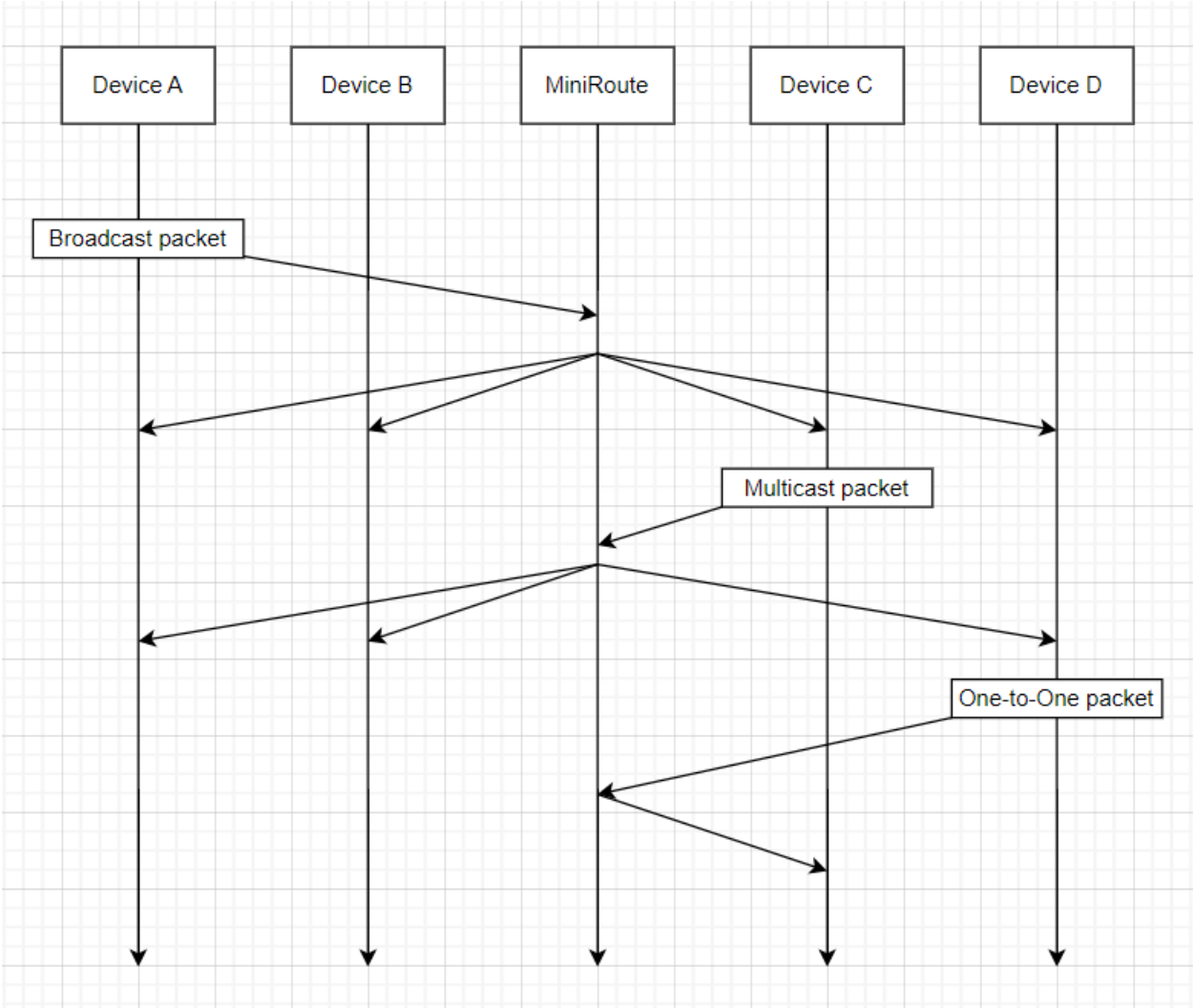

Fig 4.1 Different Packets and how they behave in time

In case of an erroneous packet, following will be the flow

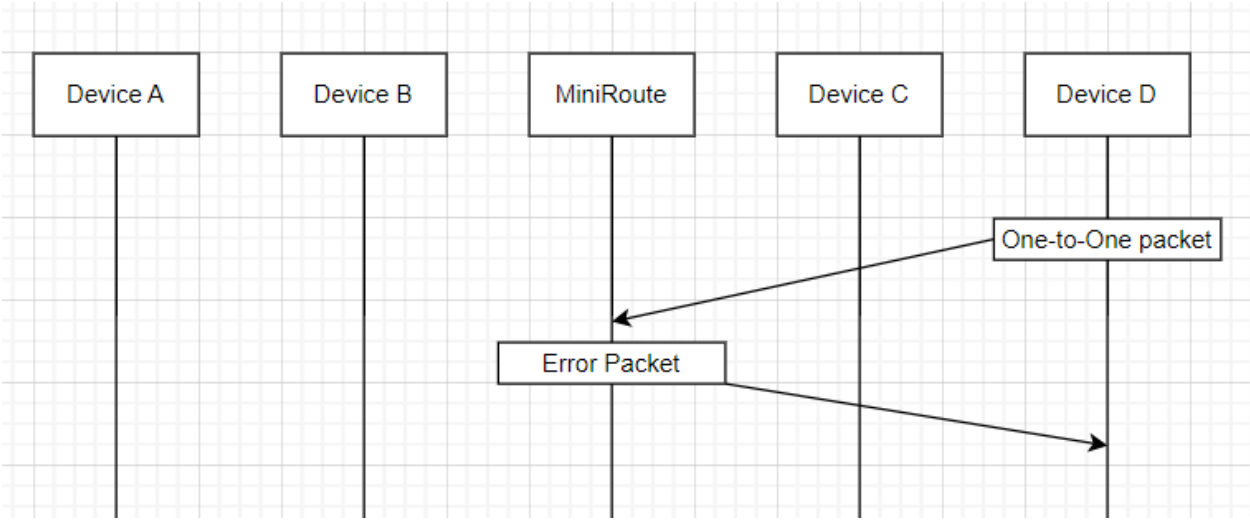

Fig 4.2 Error Packet Scenario

5- Components

Here is a top level block diagram of MiniRoute

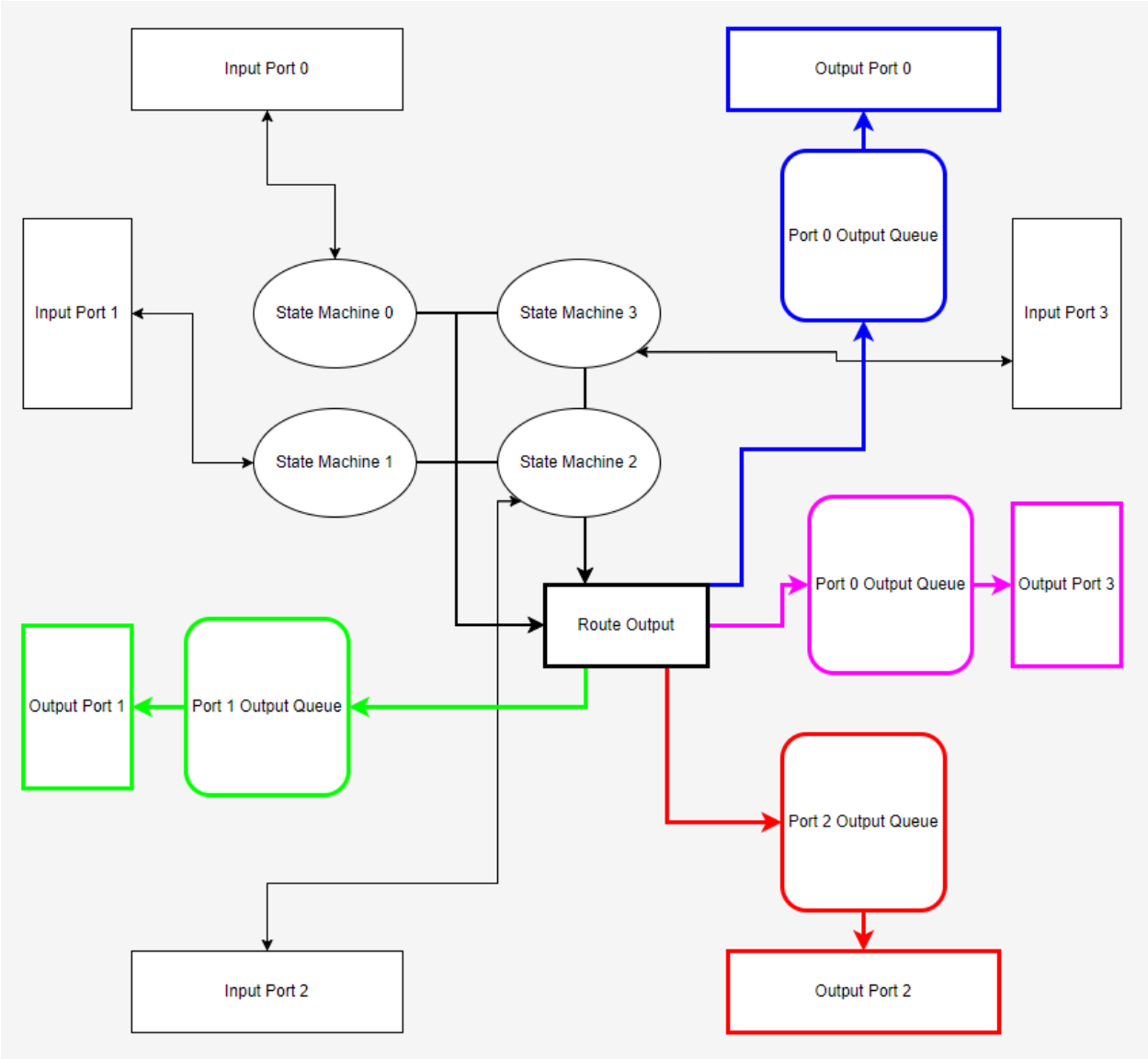

Fig 5.1 Top Level Block Diagram

Each state machine is responsible for checking the packet integrity. If the packet is valid then it is routed to its respective destination, otherwise an error is routed to the ports own output queue.

5.a State Machine

While the design itself is not a direct state-machine as all 4 ports are independent of each other, the working of a single port can be described by the following state-machine.

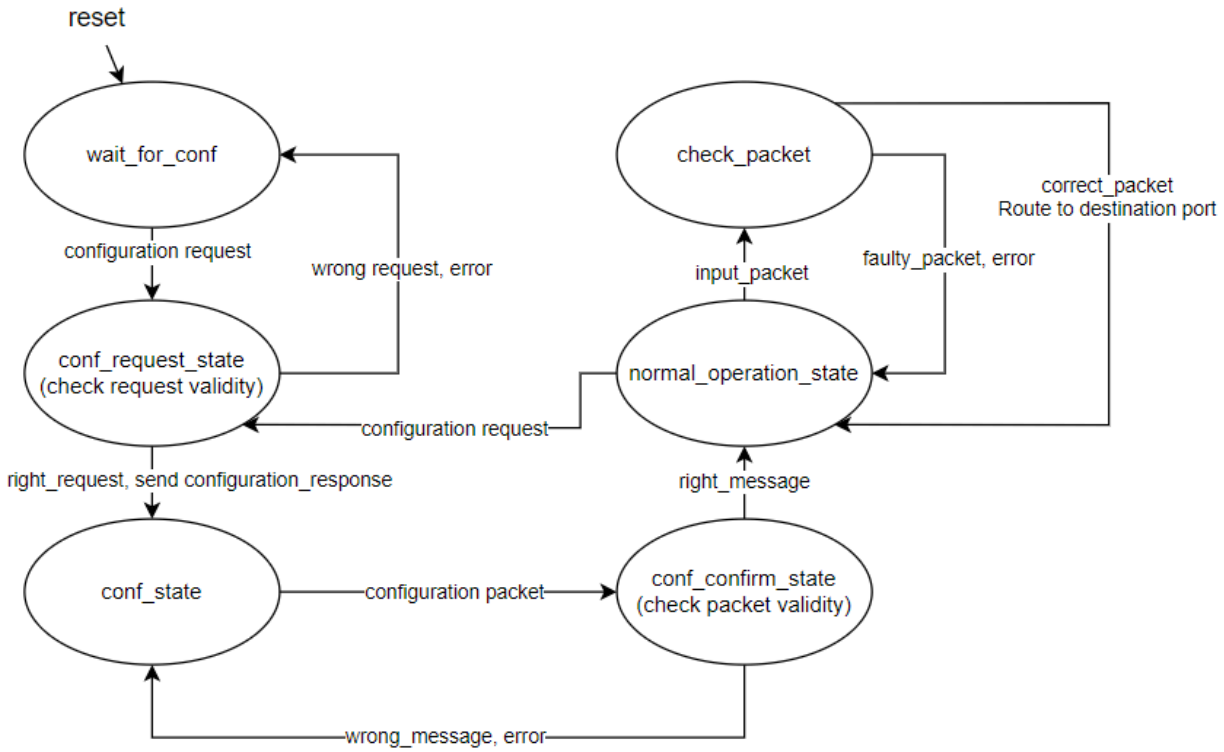

Fig 5.2 Individual Port State Diagram